REVISIONS				
REV.	ZONE	DESCRIPTION	DATE	APPRD
1	ALL	INITIAL RELEASE	08/01/2026	

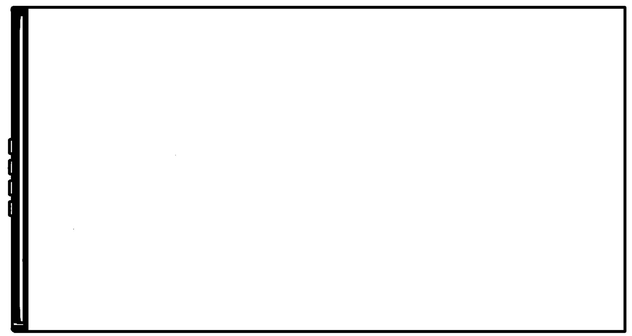

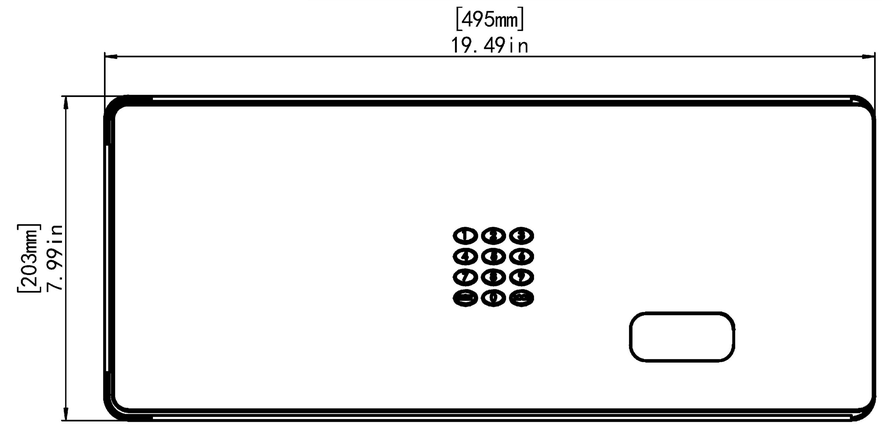

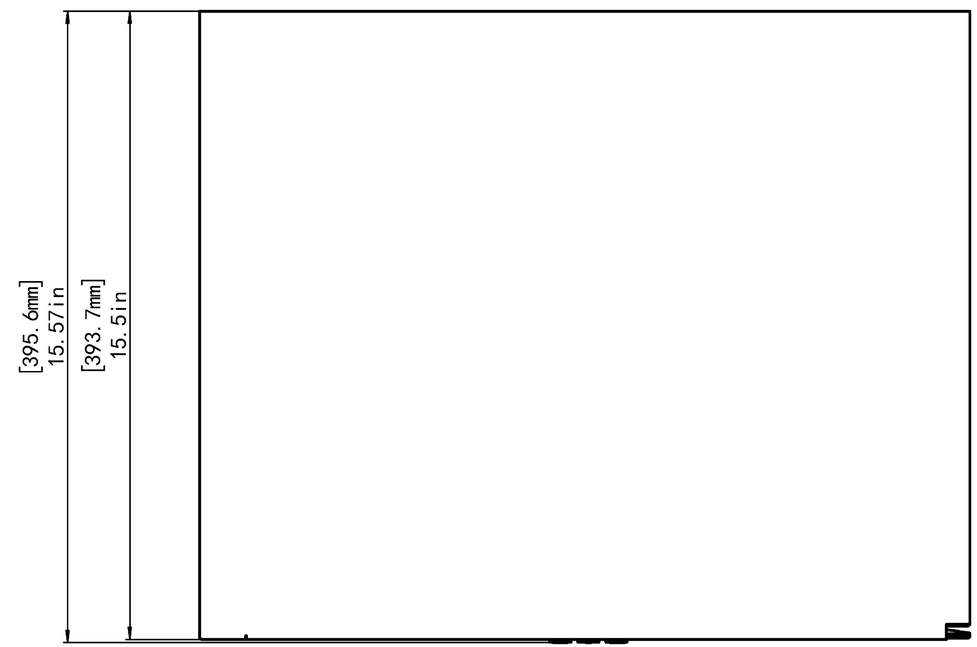

UNLESS OTHERWISE SPECIFIED:

DIMENSIONS ARE IN INCHES
TOLERANCES:
FRACTIONAL ± 1/16
ANGULAR: ± 1/2°
TWO PLACE DECIMAL +/-.05
THREE PLACE DECIMAL +/- .005
FOUR PLACE DECIMAL +/- .0005

	NAME	DATE
DRAWN		
CHECKED	JF	08/01/2026
ENG APPR.		
MFG APPR.	AZ	08/01/2026

THE INFORMATION CONTAINED IN THIS DRAWING IS THE SOLE PROPERTY OF SAFEMARK. ANY REPRODUCTION IN PART OR AS A WHOLE WITHOUT THE WRITTEN PERMISSION IS PROHIBITED. PROPRIETARY AND CONFIDENTIAL

THIRD ANGLE PROJECTION

DO NOT SCALE DRAWING

SAFEMARK™
Orlando, FL

TITLE: CG17

SIZE C | DWG. NO. | REV 1

SCALE: 1:4 | WEIGHT: | SHEET 1 OF 2

103676

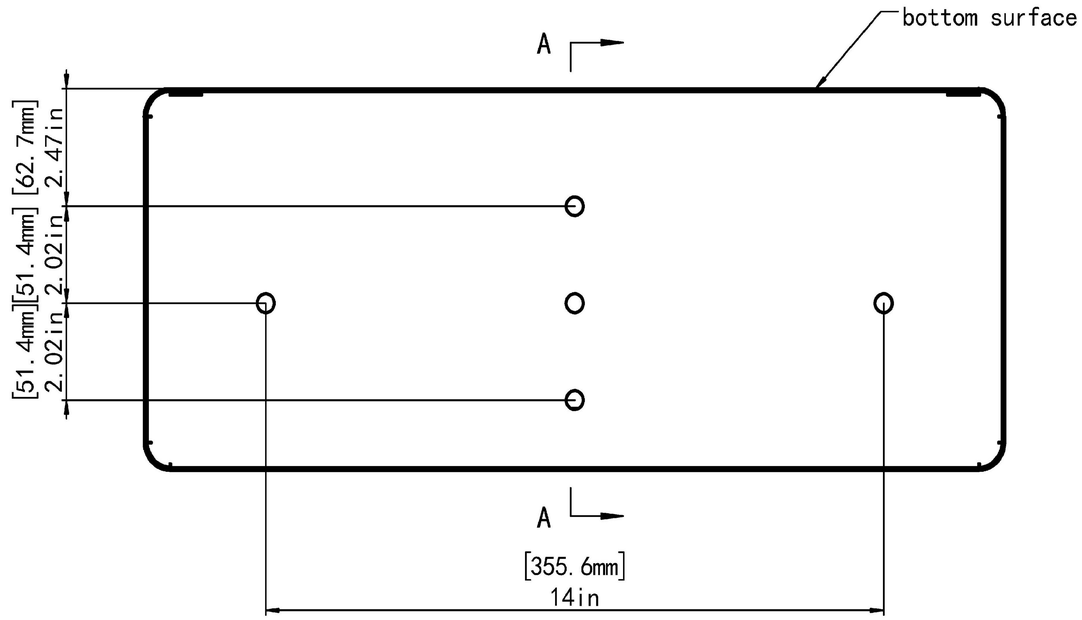

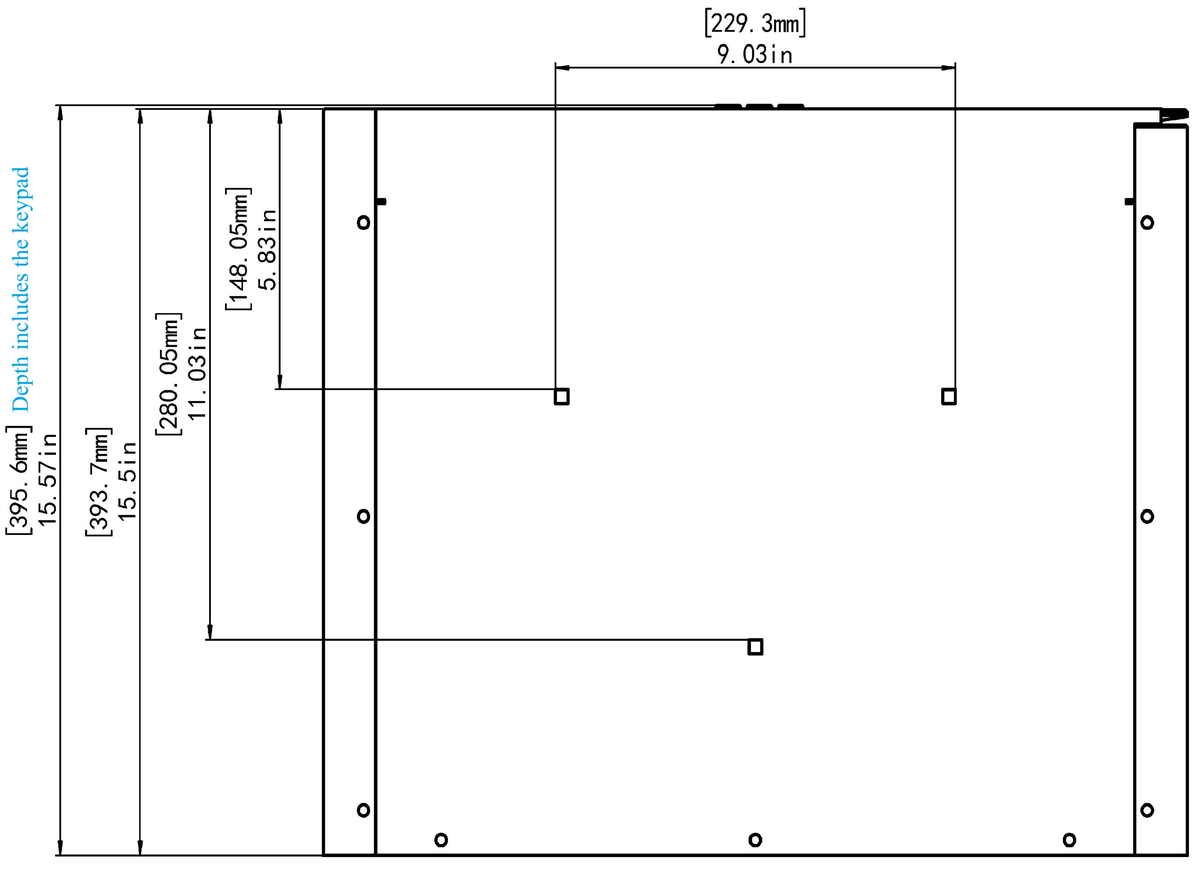

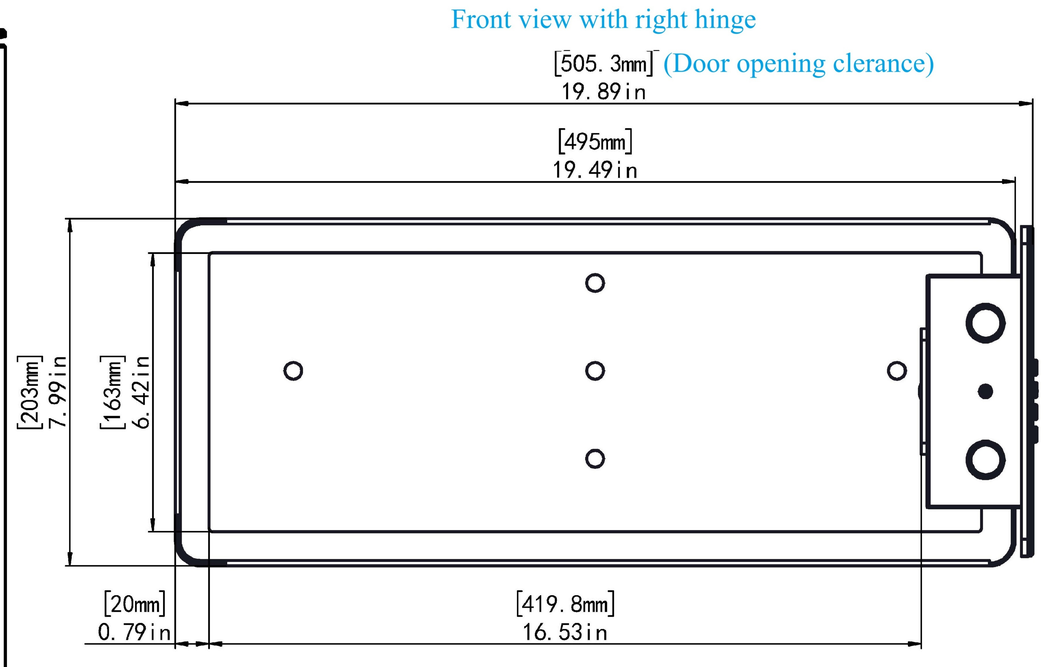

SIZE	DWG. NO.	REV
C		1
SCALE: 1:4	WEIGHT:	SHEET 2 OF 2