REVISIONS				
REV.	ZONE	DESCRIPTION	DATE	APPRD
1	ALL	INITIAL RELEASE	06/30/2015	

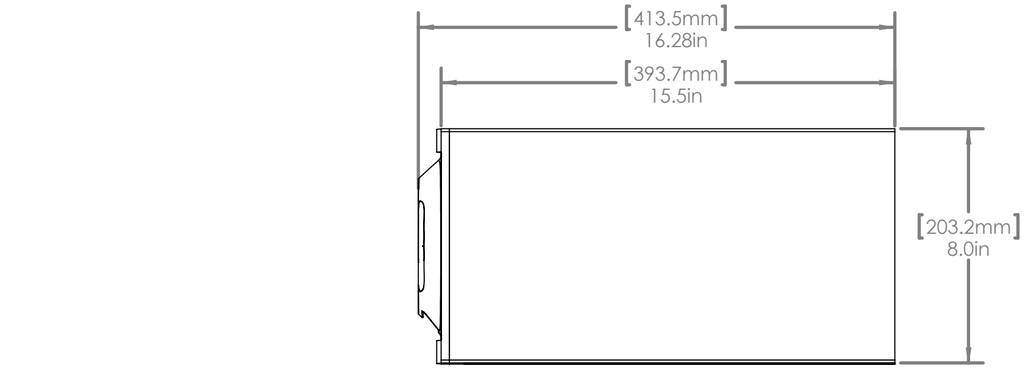

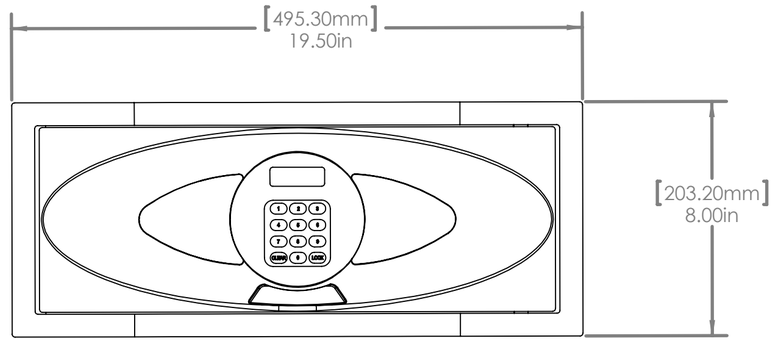

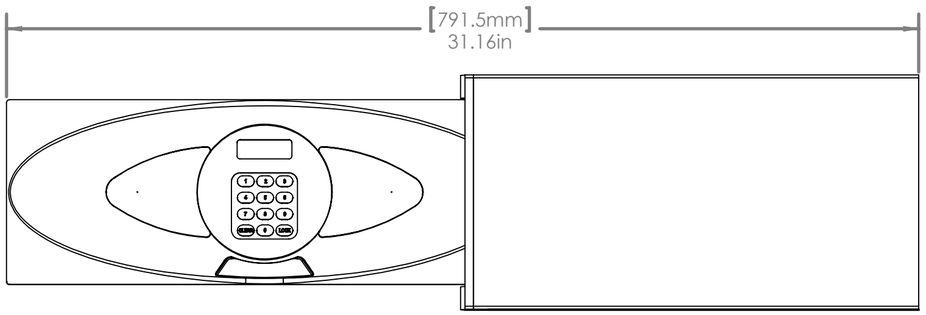

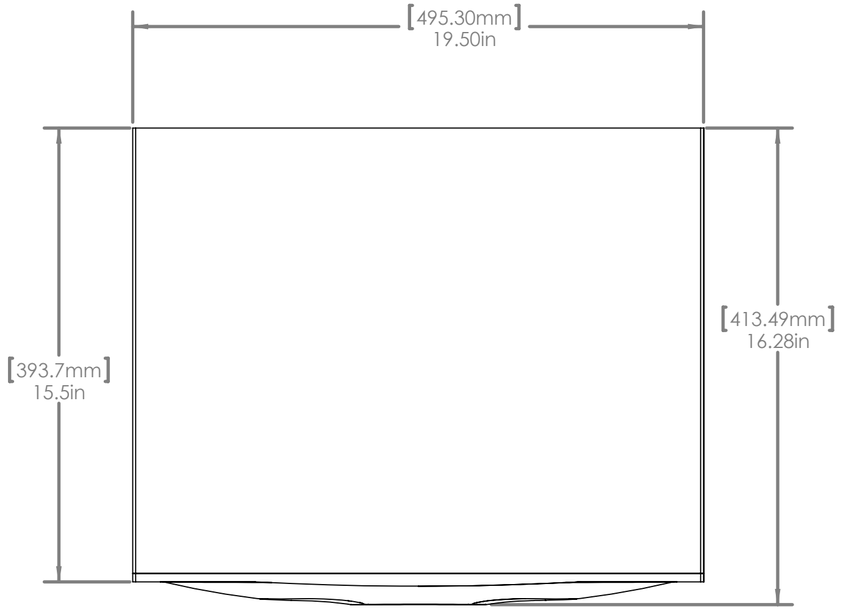

UNLESS OTHERWISE SPECIFIED:

DIMENSIONS ARE IN INCHES
TOLERANCES:
FRACTIONAL ± 1/16
ANGULAR: ± 1/4°
TWO PLACE DECIMAL +/-.01
THREE PLACE DECIMAL +/- .005
FOUR PLACE DECIMAL +/- .0005

THE INFORMATION CONTAINED IN THIS DRAWING IS THE SOLE PROPERTY OF SCOOTERBUG INCORPORATED. ANY REPRODUCTION IN PART OR AS A WHOLE WITHOUT THE WRITTEN PERMISSION OF SWYLITE CORPORATION IS PROHIBITED. PROPRIETARY AND CONFIDENTIAL

	NAME	DATE
DRAWN	BC	06/30/2015
CHECKED		
ENG APPR.		
MFG APPR.		

THIRD ANGLE PROJECTION

DO NOT SCALE DRAWING

SAFEMARK SYSTEMS
Woburn, MA - Orlando, FL

TITLE:
LTX-3

SIZE	DWG. NO.	REV
C	LTX-3	1

SCALE: 1:4 | WEIGHT: | SHEET 1 OF 2

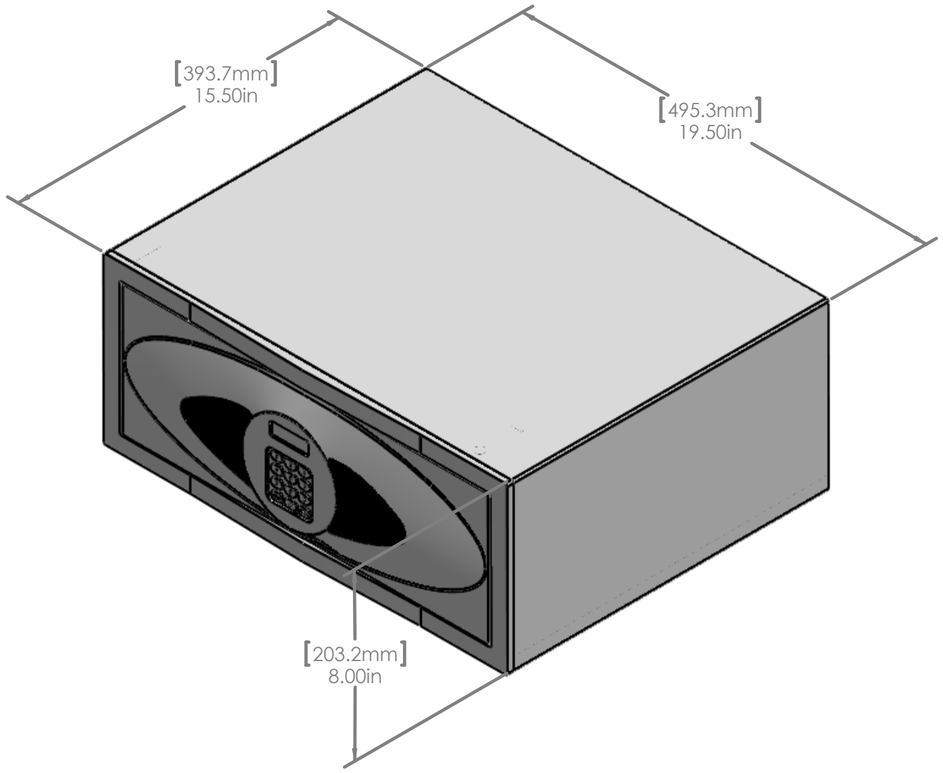

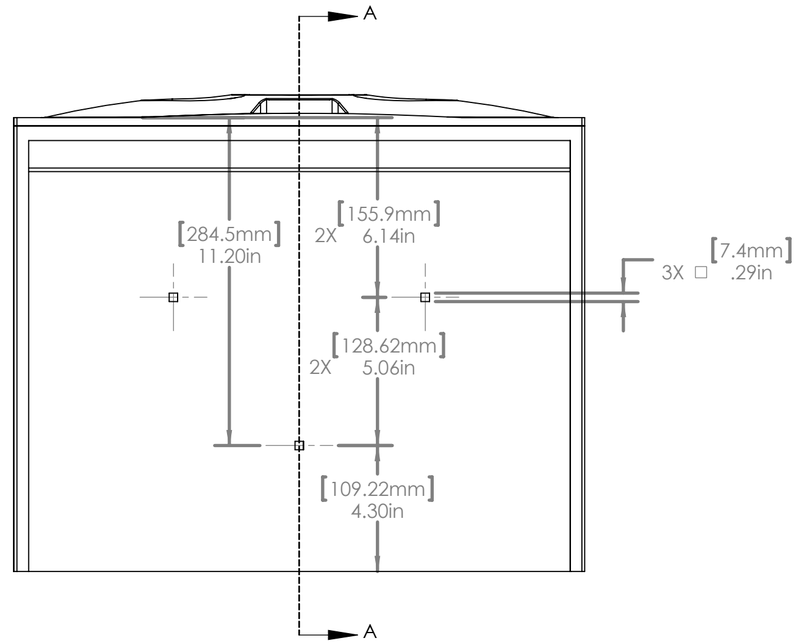

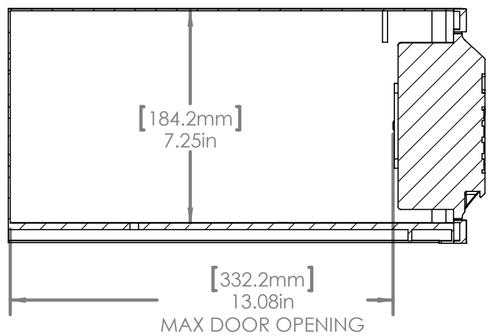

SECTION A-A

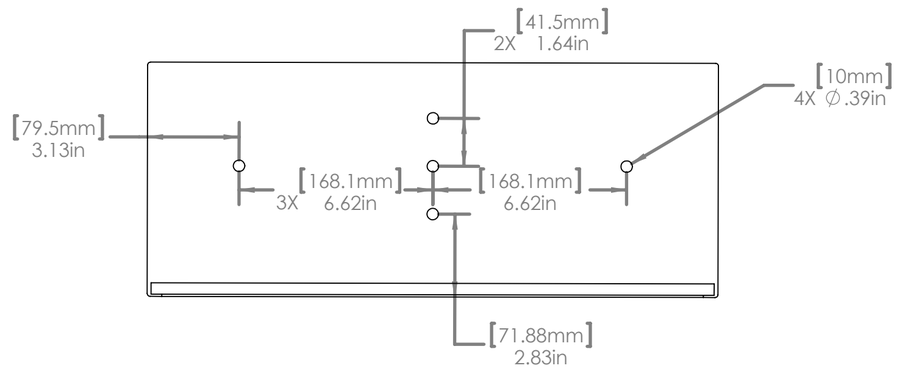

SIZE	DWG. NO.	REV
C	LTX-3	1
SCALE: 1:4		SHEET 2 OF 2